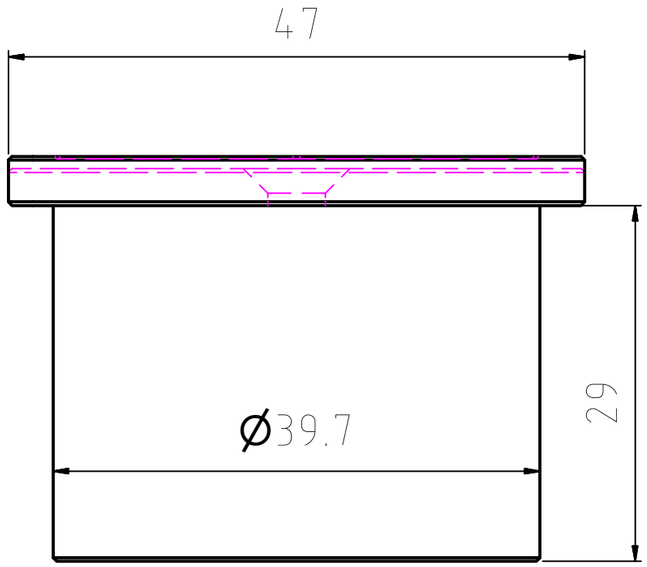

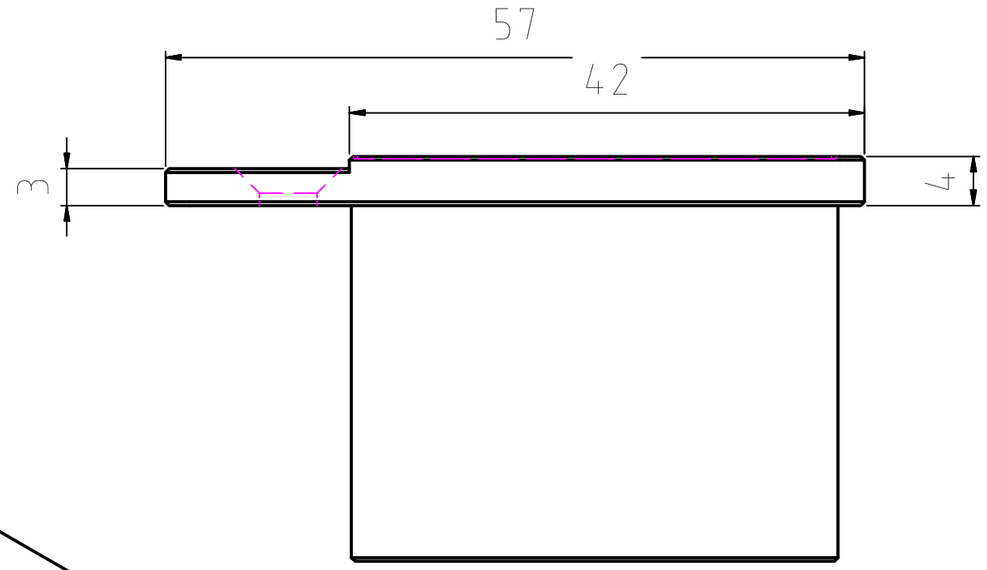

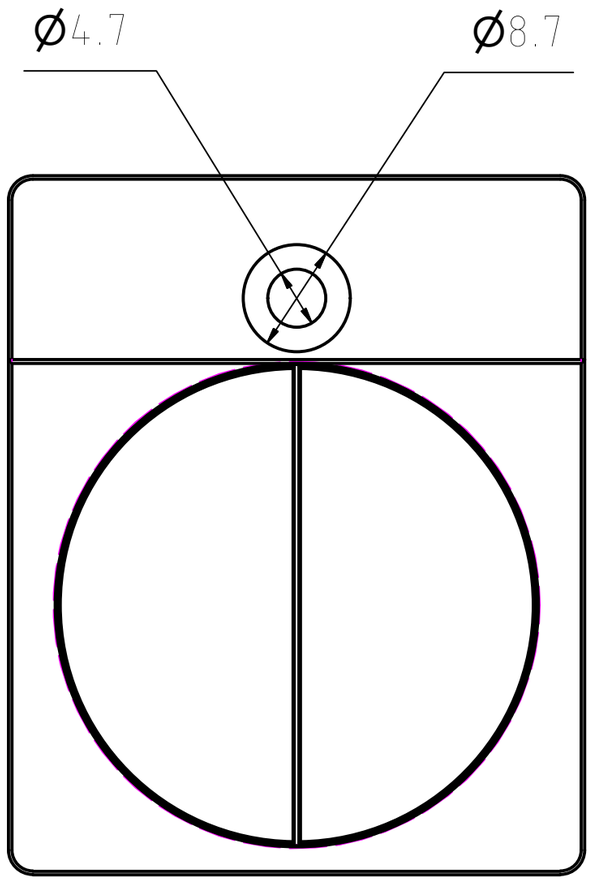

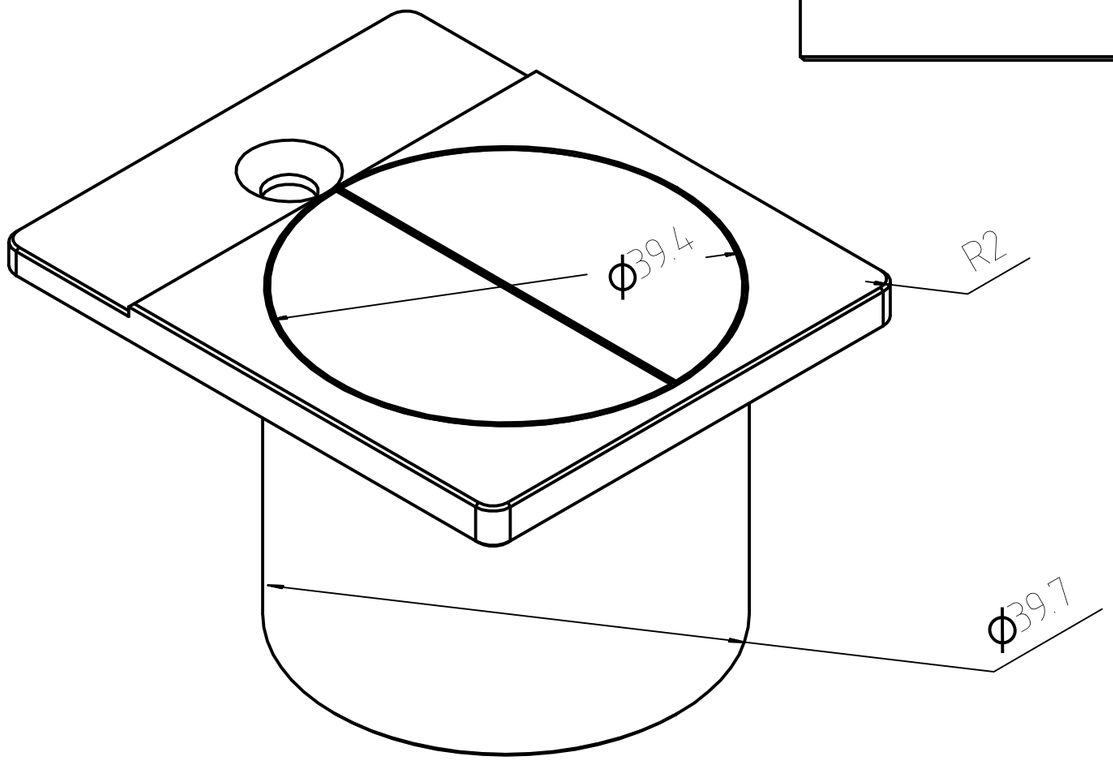

						Surface	Scale -	Position -	Quantity -
							-	-	
							-	-	
					Date	Name			
				Drawn					
				Checked					
				Standard					
							-		Page -
									Pg
State	Changes	Date	Name	Filename					